Basic safety notes

EN

The Geberit repair tool has been developed and manufactured in accordance with state-of-the-art technology. It has been tested to comply with the recognised European safety regulations for electrical equipment by Electrosuisse.

- Read the safety notes in their entirety and follow the instructions they contain to the letter
- Read through the operating instructions in their entirety before commissioning the repair tool and follow the instructions they contain to the letter
- Keep the operating instructions together with the repair tool
- Comply with the relevant national safety regulations

DANGER
Fatal electric shock hazard

- Do not perform any repairs on pipes and concealed cisterns that are wet or are carrying water
- Protect the repair tool against moisture
- If the mains cable is defective, have it replaced by Geberit or a qualified expert
- Disconnect the mains plug before starting any work that is not part of the repair process
- Avoid contact between the mains cable and the repair tool

DANGER
Explosion hazard

- Do not use the repair tool close to highly inflammable fluids or in potentially explosive atmospheres (gas or dust)

WARNING
Risk of injury from burns

- Do not touch the welding areas during operation or during the cooling-down phase
- Insert the repair tool in the stand provided during breaks in work
- Only use the repair tool on a smooth, solid surface

B501-0028BDC © 09-2008

www.inrusstrade.ru

WARNING

Risk of injury from lack of care

- Only use the repair tool if it is in perfect working order
- Check the repair tool for damage every time before you use it
- Keep the working area clean and tidy
- Keep children and other persons away whilst the repair tool is being used
- Store the repair tool in a locked room out of the reach of children
- Do not use the repair tool if tired or under the influence of alcohol, drugs or medicaments

CAUTION

Risk of damage to the device from incorrect handling

- Have any malfunctions and damage on the repair tool repaired immediately by Geberit or an authorised specialist workshop
- Store the repair tool in a dry room
- Clean the repair tool regularly and check it is functioning correctly
- Do not use steel wool or the like for cleaning
- Clean the dirty repair tool when slightly warm, using a clean, dry cloth
- Do not use fluids for cleaning

Intended use

The Geberit repair tool is only allowed to be used for repairing holes in Geberit PE and Geberit Silent-db20 pipes and fittings ø 40 - 160 mm, as well as for holes in Geberit PE concealed cisterns.

Any other utilisation is deemed to be a violation of the intended use. Geberit will not accept any liability for damage resulting from this.

B501-0028&BDC © 09-2008

www.inrusstrade.ru

EN

Structure

The repair tool kit consists of the following individual components:

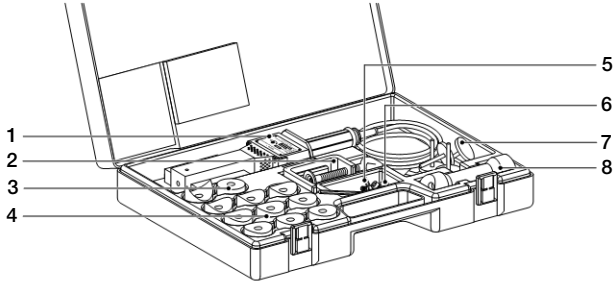

1 Repair tool with mains cable
2 Tool holder
3 Flat insert for concealed cistern
4 10 pipe inserts for ø 40 - 160 mm
5 Allen key
6 Allen screws for securing inserts
7 Package with ten repair discs
8 Press handle for repair discs; can be used on both sides, side 1 up to ø 63 mm, side 2 up to ø 75 mm

Technical data

- Mains voltage 230 V / 50 - 60 Hz
- Power input 180 W
- Net weight approx. 1.5 kg
- Permitted ambient temperature -10 °C to +40 °C
- Temperature regulator built-in; set to 230 °C at the factory

We reserve the right to make changes to the design!

Contact

For technical information or if you have any questions, please contact an authorised specialist workshop. For information about the addresses of authorised specialist workshops, please contact your responsible Geberit sales company directly or visit www.geberit.com.

B501-0028BDC © 09-2008

www.inrusstrade.ru

Operation

Prepare the area of the repair

Maximum size of the area of the repair 20 x 20 mm or ø 20 mm.

1 Scrape the surface of the area of the repair with a knife

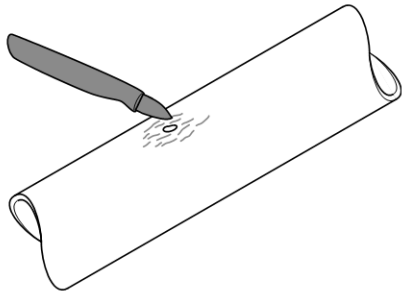

2 Mark the centre of the area of the repair on all sides

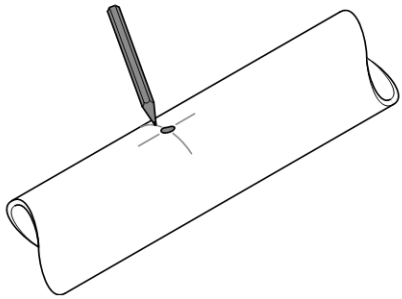

B501-0028BDC © 09-2008

www.inrusstrade.ru

EN

Prepare the repair tool

The necessary insert can also be screwed tight at the side (2.) for repairs in areas that are difficult to access.

1 Screw an insert or flat insert matching the pipe diameter onto the repair tool (1.)

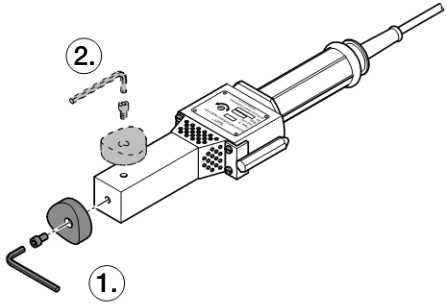

WARNING
Risk of injury from burns
- Do not touch the welding areas

2 Insert the repair tool in the tool holder and connect the mains cable. The welding temperature is reached after about 20 minutes warm-up time

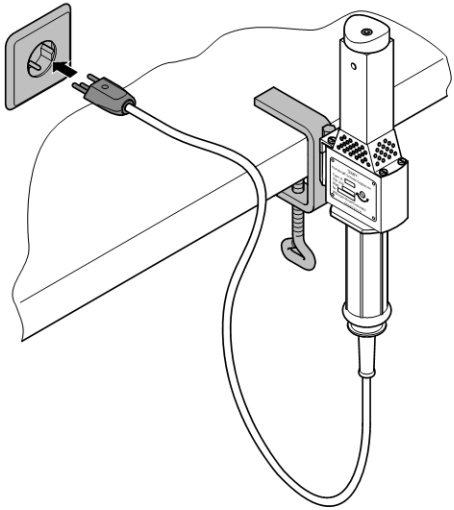

B501-002&BDC © 09-2008

Perform the repair

Prerequisites

- The area of the repair is prepared
- The area of the repair is dry
- The repair tool is prepared

1 Heat the area of the repair and the repair disc simultaneously

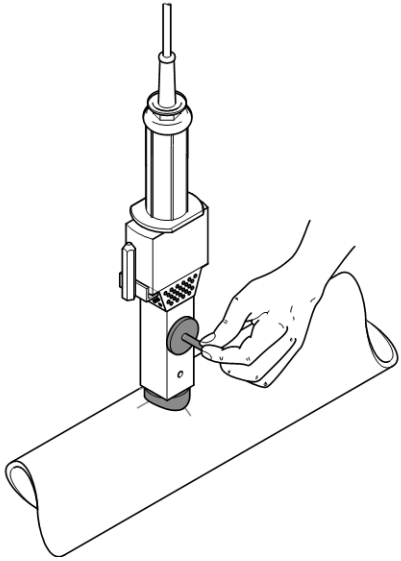

2 Press the heated repair disc onto the area of the repair using the press handle

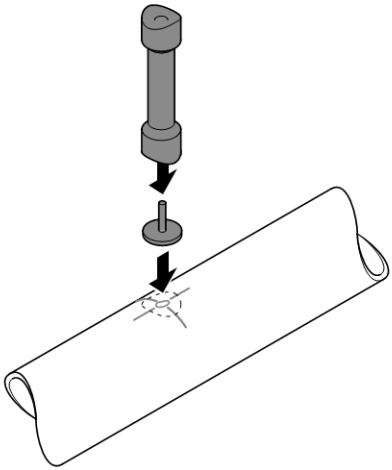

B501-0028BDC © 09-2008

www.inrusstrade.ru

EN

3 Let the repair disc cool down and cut off the holding rod of the repair disc with a knife

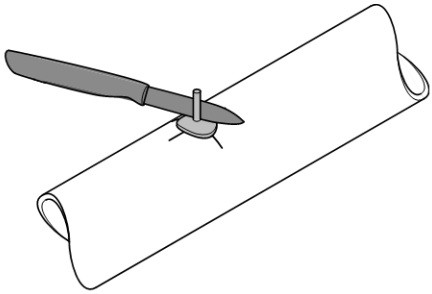

Result
The repair is completed.

Maintenance

Cleaning the repair tool

DANGER
Fatal electric shock hazard
▸ Disconnect mains plug

1 Clean the repair tool when slightly warm, using a clean, dry cloth

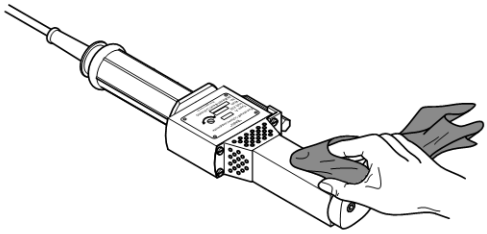

B501-002&BDC © 09-2008

B501-0028&BDC © 09-2008

www.inrusstrade.ru

GEBERIT

Geberit International AG
CH-8645 Jona

www.geberit.com
dokumentation@geberit.com

www.inrusstrade.ru