Geberit MEDIA

GEBERIT

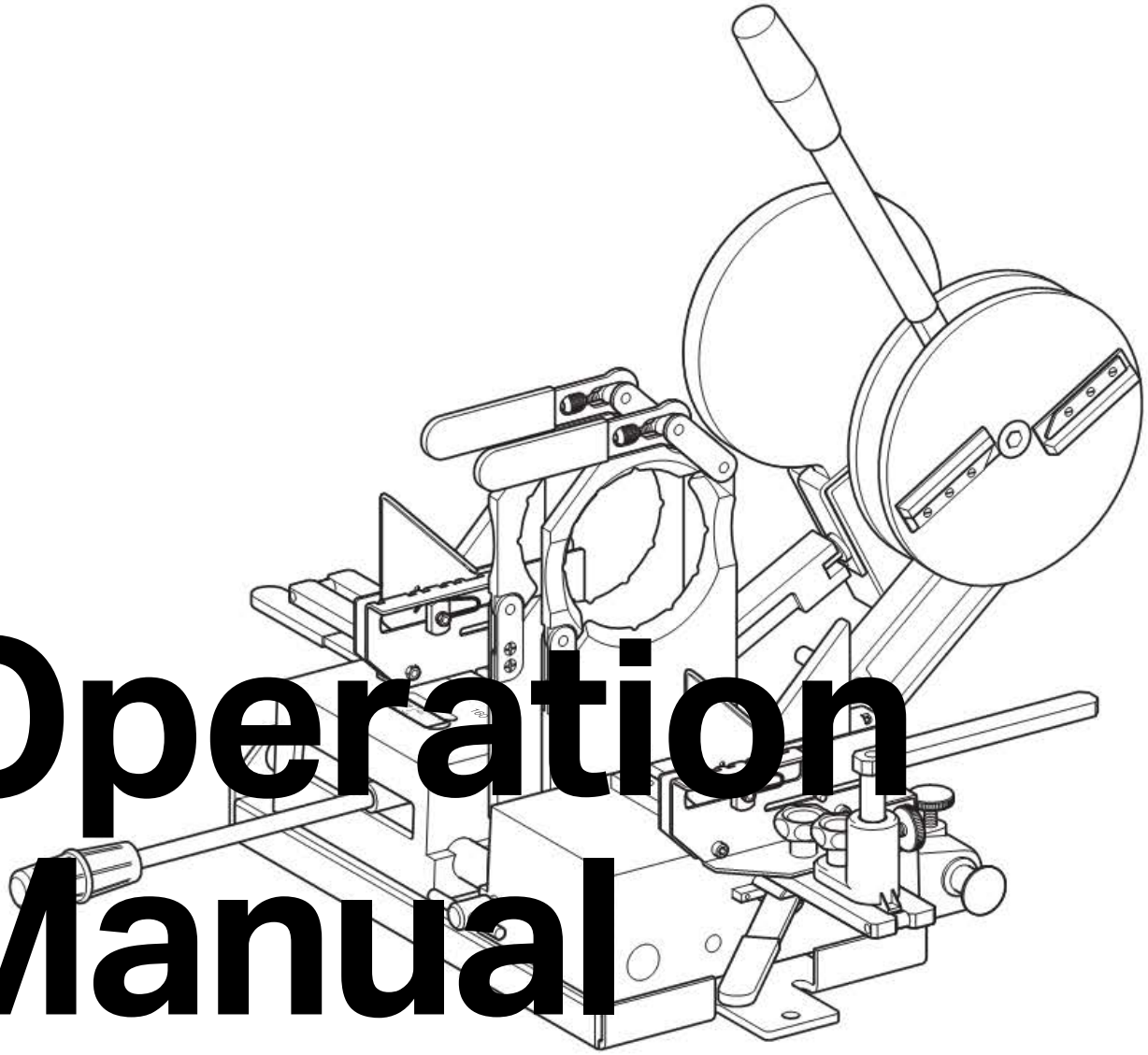

Operation Manual

Betriebsanleitung
Manuel d'utilisation
Istruzioni di funzionamento

KNOW HOW INSTALLED

www.inrusstrade.ru

Translation of the original operating instructions

EN

Safety

Basic safety notes

- Read through the operating instructions before commissioning the tool and follow the instructions they contain to the letter
- Keep the operating instructions together with the tool
- Follow the country-specific safety regulations

DANGER
Danger of fatal electric shock
- Before using, always check the welding machine, mains connection cable, mains plug and start button of the electric plane for damage and proper functioning
- Do not touch damaged mains connection cables or mains plugs. Have them replaced immediately by an electrically skilled person
- Disconnect the mains plug before carrying out any maintenance work on the welding machine
- Avoid contact between the mains connection cable and the machine modules
- Have electrical equipment checked according to local regulations

WARNING
Risk of injury from lack of care
- Fix the welding machine to a flat, solid substructure
- Only operate the welding machine in weather-protected places
- Only use the welding machine if it is in perfect working order
- Always check all parts of the welding machine for damage before use
- Only use the welding machine in well-ventilated areas
- Do not store combustible material within 1 m of the welding machine
- Keep the working area clean and tidy
- Adequately illuminate the working area
- Keep children and unauthorized persons away from the workplace during operation of the welding machine
- Do not use the welding machine if tired or under the influence of alcohol, drugs or medication
- Do not leave the welding machine unattended

CAUTION
Risk of injury from incorrect handling
- Only replace damaged parts with original Geberit spare parts
- Wear non-slip shoes
- Tie up baggy or loose clothing
- Keep long hair in place with a hair net
- Avoid having suspended objects in the working area
- Do not wear protective gloves while operating the electric plane
- Take the weight of the welding machine into account; use suitable means of transport when transporting the machine

CAUTION
Risk of damage to the device from incorrect handling
- Use the transport case for transport and storage, and store the welding machine in a dry room
- Service the welding machine regularly and check it is functioning correctly
- Any malfunctions or damage to the welding machine should be rectified immediately by Geberit or an authorized repair shop

B791-003 © 04-2012

Symbols in the instructions

Symbol	Meaning
DANGER	Refers to an immediately dangerous situation that may cause serious injury or death.
WARNING	Refers to a potentially dangerous situation that may cause serious injury or death.
CAUTION	Refers to a potentially dangerous situation that may cause slight or moderate injury or material damage.
	Refers to important information.

Symbols on the welding machine

Symbol	Meaning
	Danger of fatal electric shock.
	Risk of burns from hot welding plate.
	Danger of cuts from the planer blade.
	Danger of crushing by openly routed belt.
	Wear protective goggles while using the electric plane.
	Wear ear protection while using the electric plane.

Target group

This tool may only be used by skilled persons in accordance with EN IEC 62079:2001.

Intended use

The Geberit welding machine MEDIA is to be used exclusively for planing and welding Geberit PE and Geberit Silent-db20 pipes and fittings of up to ø 160 mm.

Any other use or a use extending beyond this is deemed to be improper. Geberit will not accept any liability for any resulting damage.

B791-003 © 04-2012

www.inrusstrade.ru

Structure

EN

The welding machine consists of:

- Base unit
- Clamping and support device
- Welding plate
- Electric or hand-operated plane
- Transport case

The equipment may vary depending on the scope of delivery.

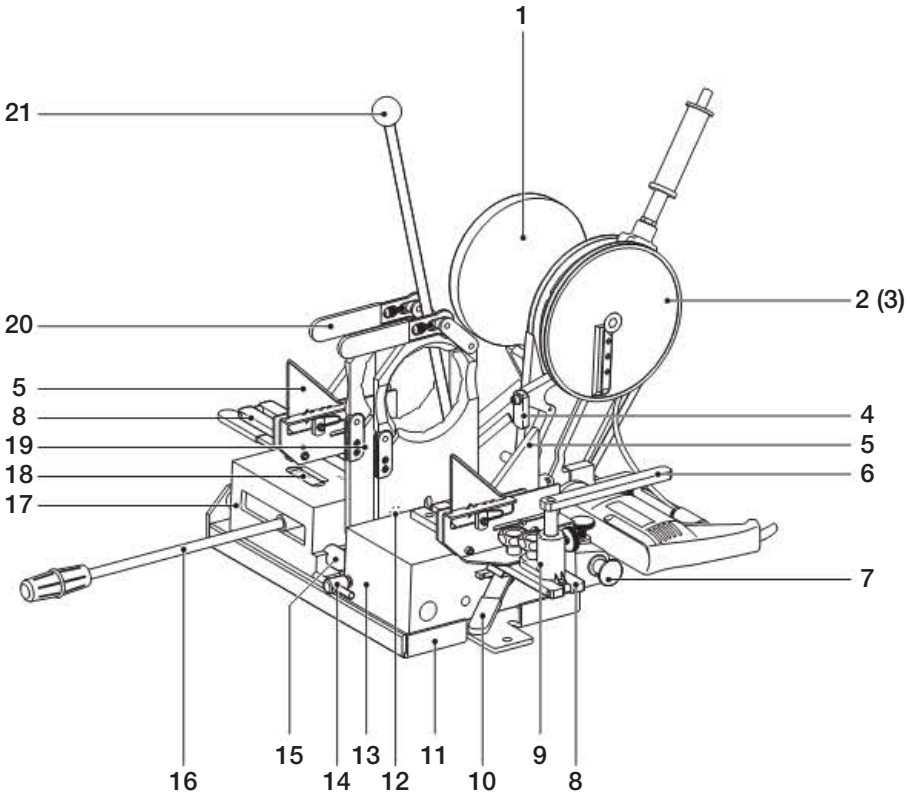

1 Welding plate KSS 160 (for pipes and fittings of up to ø 160 mm)
2 Electric plane 40–160 (for pipes and fittings of up to ø 160 mm)
3 Hand-operated plane 40–160 (for pipes and fittings of up to ø 160 mm)
4 Stopper
5 Pipe support prisms ø 50–160 mm
6 Swivel support
7 Guide bar with mushroom shaped handle
8 Support rail
9 Base
10 Eccentric lever
11 Substructure
12 Clamping screw
13 Tensioning block
14 Locking handle
15 Slide bar
16 Operating lever
17 Clamping carriage
18 Pressure scale
19 Tension device
20 Adjustable eccentric lever
21 Welding plate support

B791-003 © 04-2012

Technical data

Nominal voltage	See specification plate
Mains frequency	See specification plate
Power consumption	See specification plate
Protection degree (electric plane 40–160)	IP X0
Protection degree (welding plate KSS 160)	IP 20
Protection class (electric plane 40–160)	II
Protection class (welding plate KSS 160)	I
Net weight	18 kg
Sound pressure level at user's ear	80 dB(A)
Vibration emission value	≤ 2,5 m/s^2
Operating temperature	-10 – +50 °C
Storage temperature	-20 – +60 °C
Dimensions of the operational machine	80 x 100 x 65 cm (L x W x H)
Minimum space requirement for safe operation of the machine	≥ 2,0 x 2,0 m

B791-003 © 04-2012

www.inrusstrade.ru

Commissioning

EN

Setting up the welding machine

WARNING
Risk of injury from planer blade
- Wear protective gloves when installing the hand-operated or electric plane

1 Insert the operating lever into the clamping carriage fixed to the substructure.

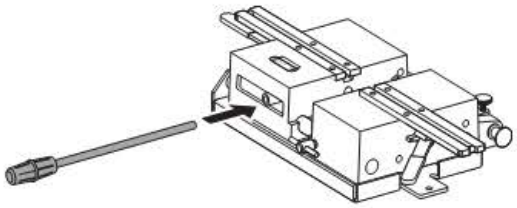

2 Push the hand-operated plane or electric plane and the welding plate support between the clamping carriage and the tensioning block. Push the guide bar through the plane and the welding plate support and fix it in place.

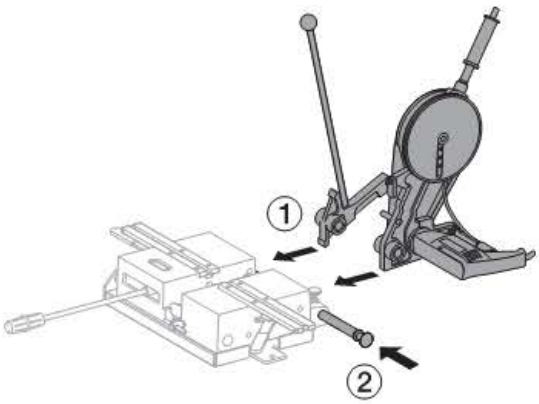

3 Mount the welding plate on the welding plate support.

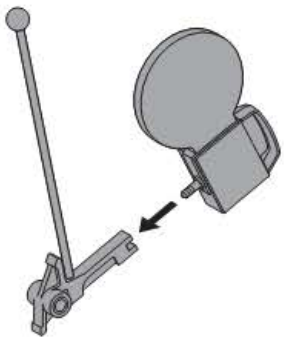

The swivelling support with base serves as a support for pipe bends or branch fittings.

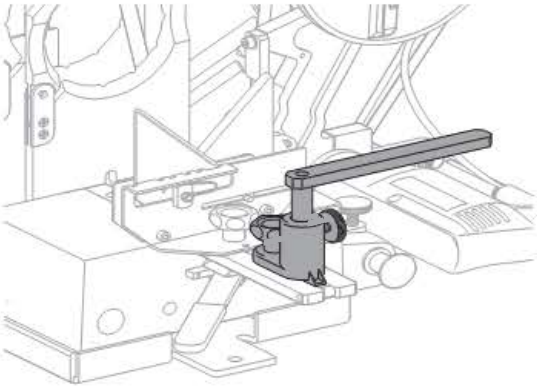

4 Place the pipe support prisms with cams on the support rail and fix them in place. If applicable, place the swivelling support onto the support rail and fix it in place.

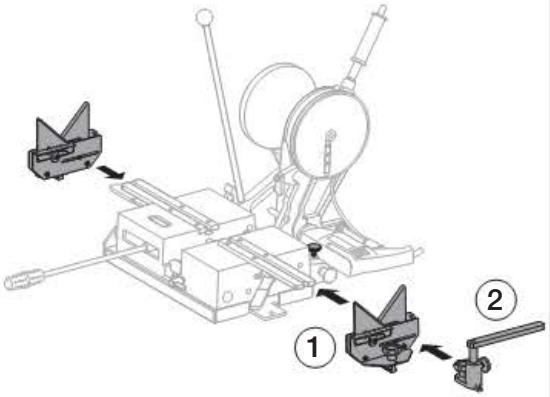

5 Place the tension devices on the protruding dovetail heads of the clamping screws.

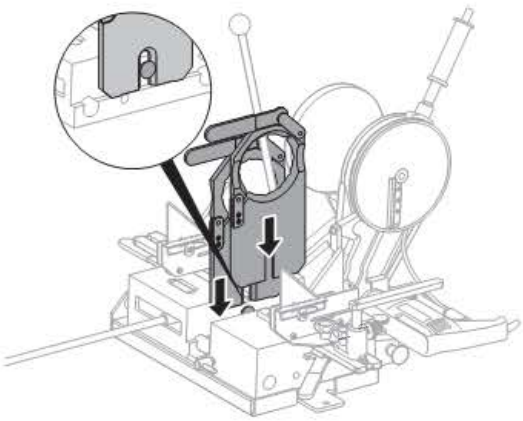

B791-003 © 04-2012

6 Align the tension devices and clamp with the eccentric levers.

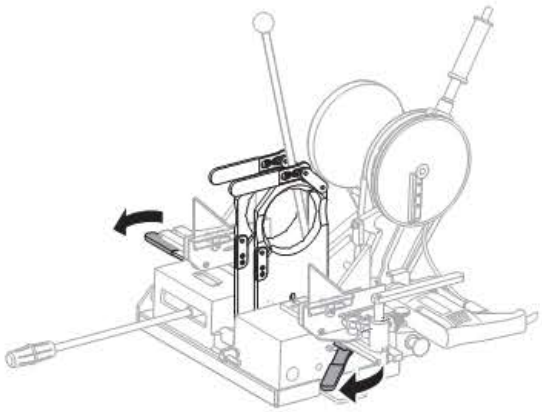

www.inrusstrade.ru

Operation

EN

Clamping the pipes or fittings

1 Set the pipe support prisms to the required dimension.

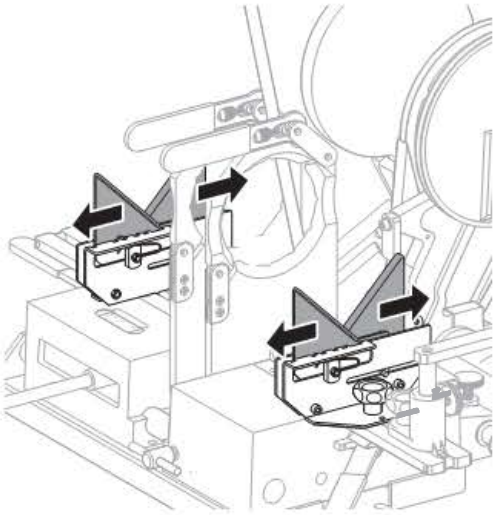

2 Fold up the brackets of the tension devices and insert the parts to be welded.

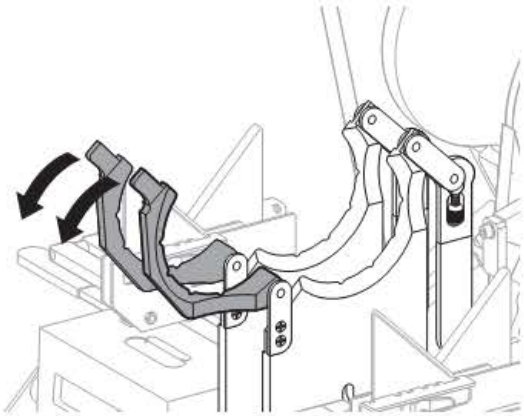

The pipes or fittings must be inserted in such a way that the ends to be welded protrude 1 cm from the tension device.

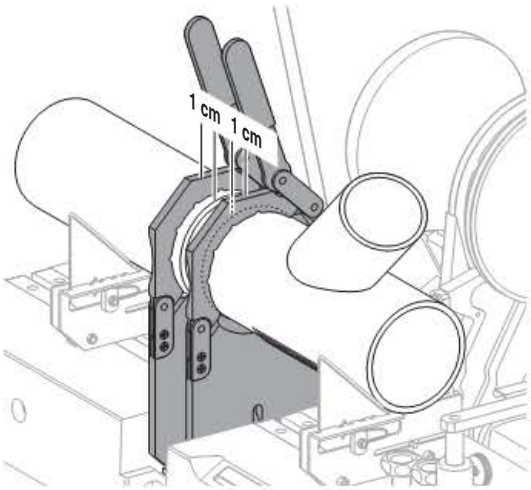

The pipe support prisms must be as far as possible from the tension devices. Branch fittings and bends must be placed with the straight section on the pipe support prisms.

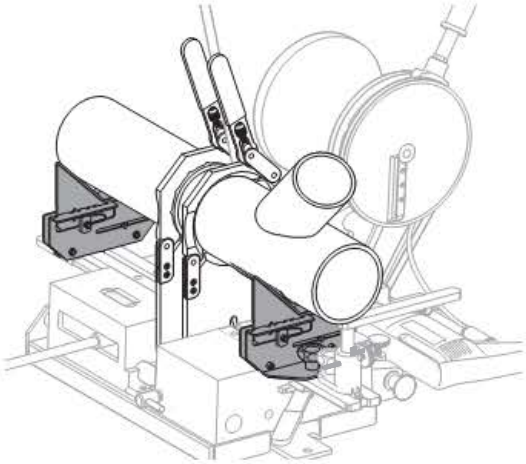

3 Clamp the pipes or fittings with the adjustable eccentric levers.

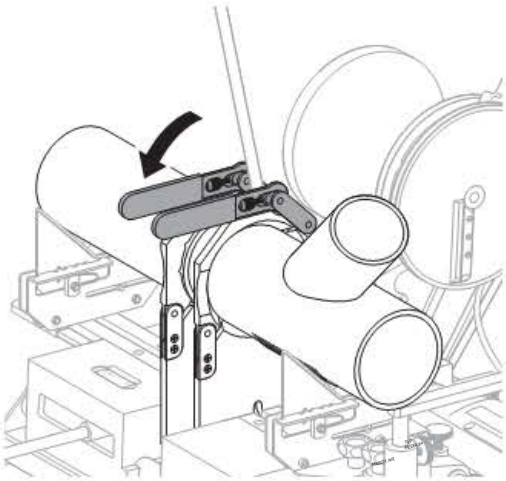

If the parts to be welded do not match one another axially, the right-hand tension device can be moved to the side by loosening the eccentric lever.

4	Press together the parts that are to be welded with the operating lever and check that the parts to be welded are fixed in place.
5	Tighten with the adjustable eccentric lever if fixing is not adequate.

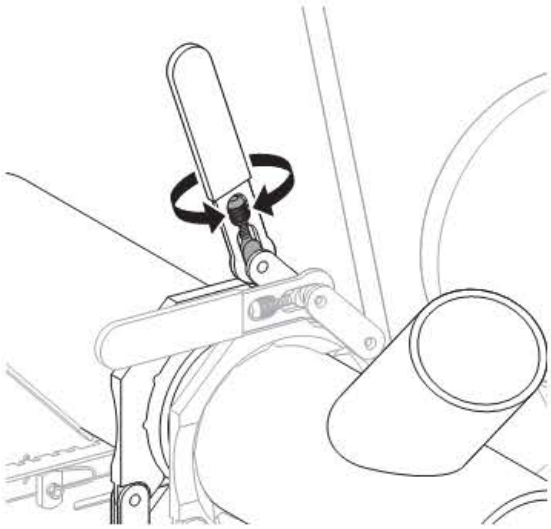

Planing the pipes or fittings

WARNING
Risk of injury from flying parts
- Only switch the electric plane on and off in the working position and with a workpiece clamped in place
- Wear protective goggles while using the electric plane

CAUTION
Danger of injury from the high noise level
- Wear ear protection while using the electric plane

1	Connect the electric plane to the power supply system.
2	Swivel the electric or hand-operated plane between the parts to be welded.

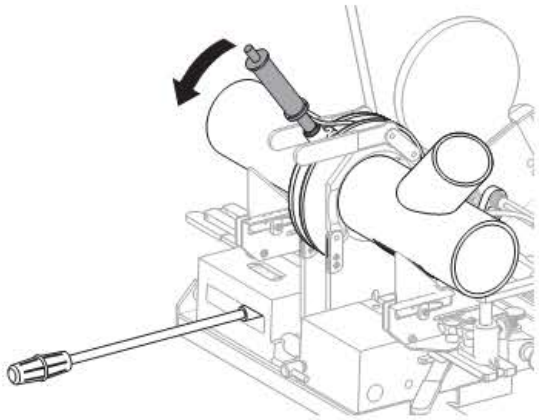

3	Press the operating lever to the right to lightly press the parts to be welded onto the plane disc on both sides.

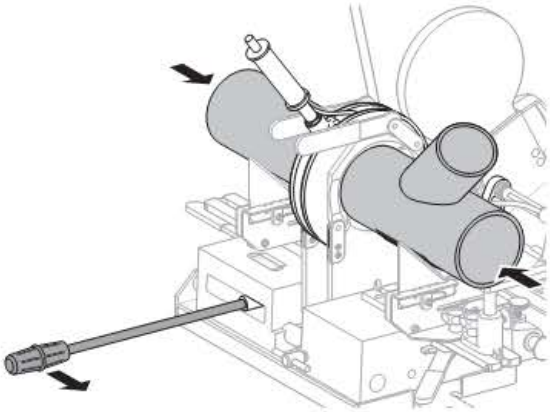

B791-003 © 04-2012

www.inrusstrade.ru

EN

When planing on one side, the stopper must be swivelled out so that there is some clearance between the plane and the empty tension device. The tension device and the plane cannot touch each other in this way.

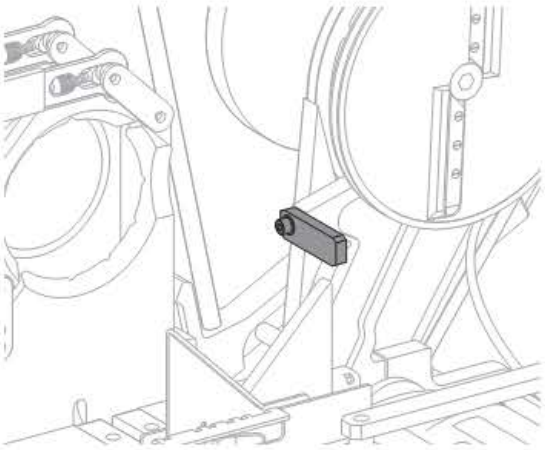

4 Switch on the electric plane by pressing the start button. Hold down the start button while planing.

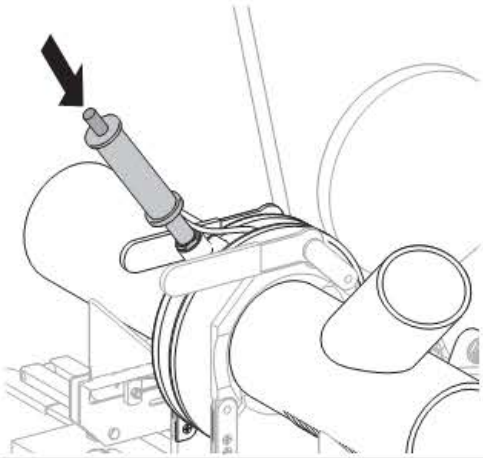

5 Release the start button to stop planing.

6 Swing the electric plane out.

7 Check the cut surfaces by bringing together the parts to be welded.

Welding the pipes or fittings

CAUTION
Risk of injury from burns
- Do not touch the welding plate during operation or during the cooling-down phase

1 Connect the welding plate to the power supply system.

2 Wait until the welding temperature has been reached.

KSS 160 and KSS 200:
The red signal lamp lights up during the heat-up phase. The green signal lamp lights up when the welding temperature has been reached.

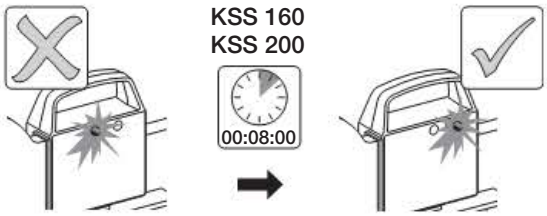

It takes around 8–10 minutes to reach the welding temperature.

3 Swivel the welding plate with the welding plate support between the parts to be welded.

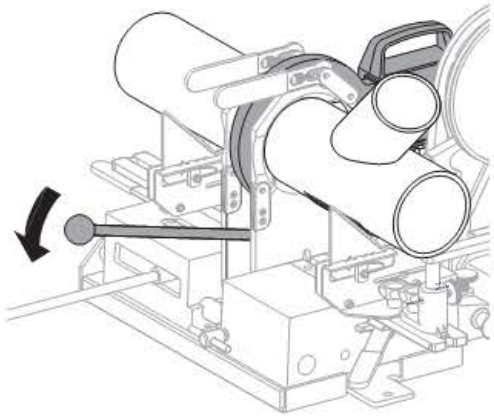

4 Press the operating lever to the right to lightly press the pipes onto the welding plate on both sides: The cut surfaces start to melt.

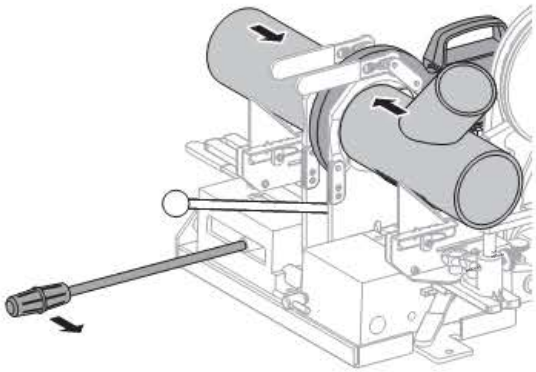

5	Observe the melting process closely: Remove the welding plate as soon as the welding bead is about half the size of the wall thickness of the pipe.
ⓘ	A certain amount of pressure must be exerted for welding. The required contact pressure is reached when the corresponding pipe diameter can be read on the pressure scale.
6	Carefully press together the parts to be welded with the operating lever until the pressure reaches the required level on the pressure scale. Maintain this pressure by tightening the locking handle until the weld seam has cooled down.

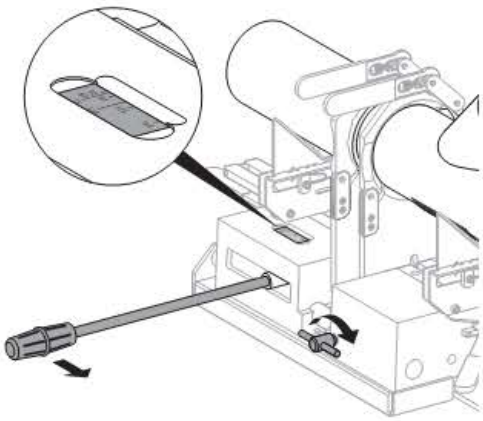

7	Loosen the locking handle once the weld seam has cooled down.

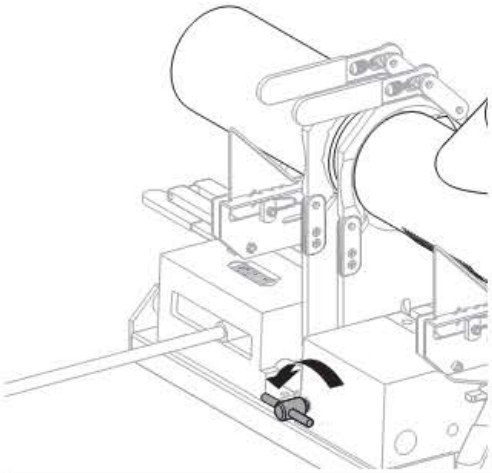

8	Remove the eccentric levers, fold up the tension devices and take out the welded pipes or fittings.

B791-003 © 04-2012

www.inrusstrade.ru

EN

Maintenance

Should repair be necessary, always send hand over the complete welding machine in the transport case.
Repair work may only be performed by authorized repair shops.
For addresses of authorized repair shops, contact your Geberit sales company or visit www.geberit.com.

Interval	Maintenance work
Regularly	- Check the welding machine, electric plane and welding plate for externally visible defects and damage that could affect safety. - Clean and lubricate the welding machine and its individual parts.

Cleaning and lubricating the welding machine

Prerequisites

The electric plane and welding plate are switched off.

WARNING
Risk of injury from switching on inadvertently
- Disconnect the electric plane and welding plate from the power supply system before starting any maintenance work on the welding machine

CAUTION
Damage to the welding machine from moisture
- Never immerse the welding machine, electric plane and welding plate in water or other liquids

1. Use compressed air or a brush to remove dirt.
2. Lubricate the welding machine and its individual moving parts with BRUNOX® Turbo-Spray® or an equivalent lubricant.
3. Wipe off any excess lubricant.

Recycling

Constituents

This product meets the requirements of the directive 2002/95/EC RoHS (Restriction of Hazardous Substances in electrical and electronic equipment).

Disposal

In accordance with directive 2002/96/EC WEEE on waste electrical and electronic equipment, manufacturers of electrical equipment are obliged to take back old equipment and to dispose of it correctly.

The symbol indicates that the product cannot be disposed of with non-recyclable waste. Old equipment should be returned directly to Geberit where it will be disposed of appropriately.

Please contact your responsible Geberit sales company or visit www.geberit.com for collection point addresses.

B791-003 © 04-2012

www.inrusstrade.ru

EC declaration of conformity in accordance with directives 2004/108/EC, 2006/42/EC and 2006/95/EC

We hereby declare that the Geberit welding machine MEDIA meets the relevant basic health and safety requirements as a result of its design and construction as well as the version that we have put on the market.

If the welding machine is used improperly or is modified without the permission of Geberit, this declaration becomes invalid.

Applied standards:

- EN ISO 12100:2010
- EN 60745-1:2009
- EN 60745-2-1:2010
- EN 55014-1:2006/A2 2008
- EN 55014-2:1997
- EN 61000
- HD 400

Dr. F. Klaiber, Managing Director

G. Taubert, Head of International Standardisation

Address

Geberit International AG, Schachenstrasse 77, CH-8645 Jona, Switzerland

Person responsible for documentation

Silvia Hildebrandt, Produktdokumentation, Geberit International AG, CH-8645 Jona, Switzerland

B791-003 © 04-2012

www.inrusstrade.ru

Geberit International AG
Schachenstrasse 77
CH-8645 Jona

dokumentation@geberit.com

➔ www.geberit.com

996.253.00.0 (07)
B791-003 © 04-2012

www.inrusstrade.ru