VARIANT

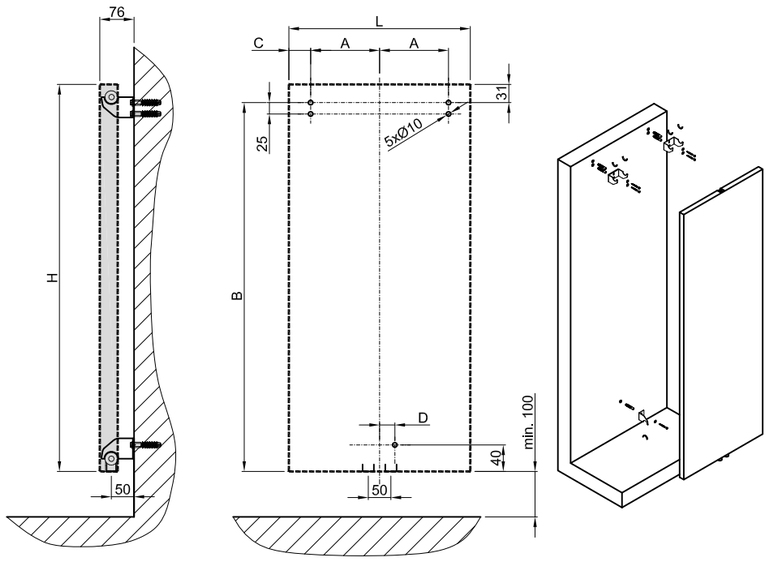

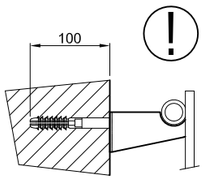

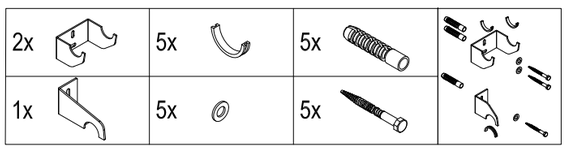

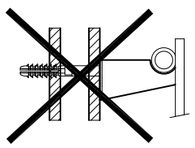

H/L [mm]	A [mm]	B [mm]	C [mm]	D [mm]
1206/456	114	1168	114	19
1806/608	190	1768	114	19

VARIANT MIRROR

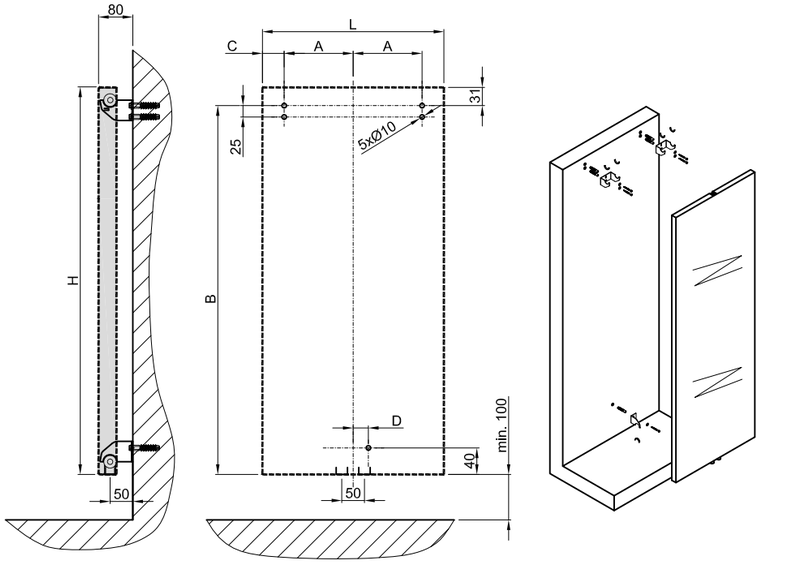

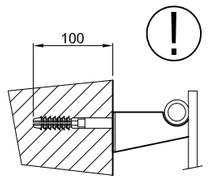

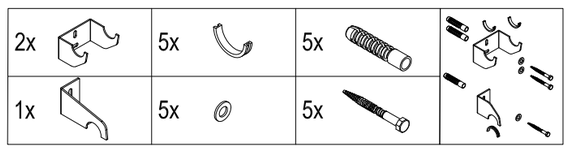

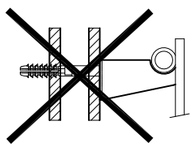

H/L [mm]	A [mm]	B [mm]	C [mm]	D [mm]
1806/456	114	1768	114	19
1806/608	190	1768	114	19

VARIANT GLASS

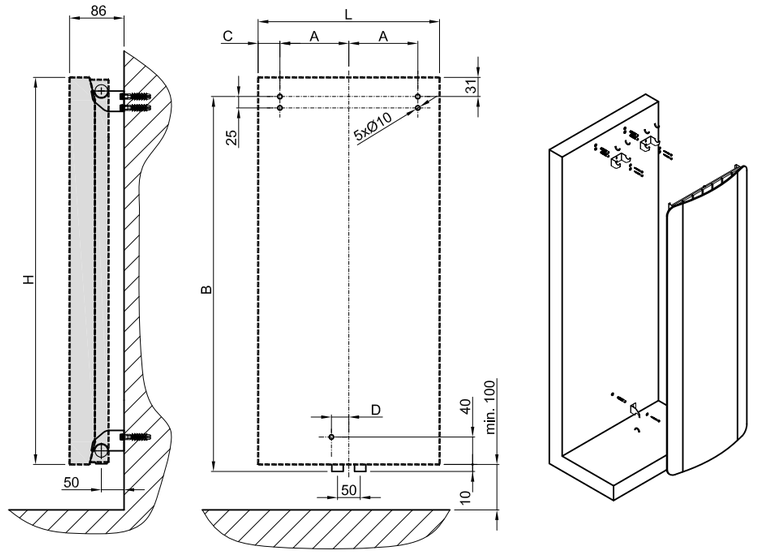

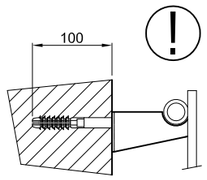

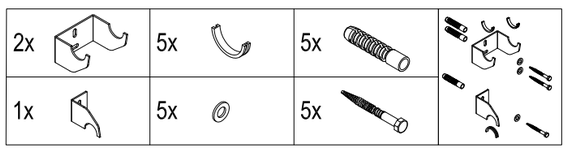

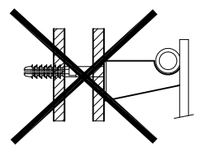

H/L [mm]	A [mm]	B [mm]	C [mm]	D [mm]
1810/620	152	1768	158	19